ASTRALPOOL

# i-MEGALINE INVER-Chill Series

AI Full Inverter Pool Heat Pump For Middle East Region




R32 R410A


Industry-First AI Solution
Industry-First Centralized Control Available
Industry-First IOT Smart Management


Industry-First Fluorine-Cooling Driver Board
Industry-First Potting Control Board
53℃
Working Under Extreme Environment

· A solidate & fixed inverter logic.
· Running at max frequency low COP running.

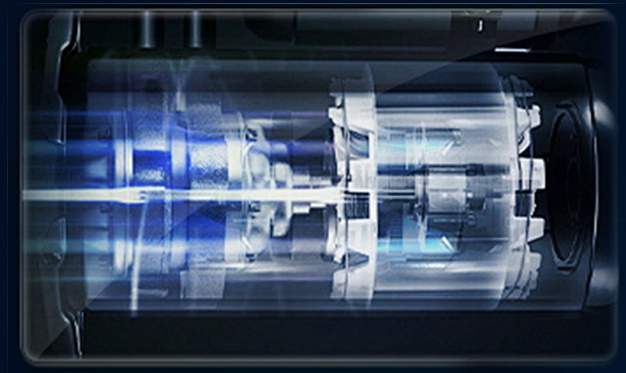

**30%+ ENERGY SAVING**

**REGULAR FULL INVERTER**

# Industry-First

## AI-CoreTech Pool Heating Solution

TUV Certified

Ai Full Inverter™

Ai CoreTech™

# AI FULL INVERTER

## TRAINED ON AN EXPERIMENTAL OCEAN

· Trained by more than 300,000 heat pumps running.

## GLOBALLY VALIDATED

· 60-country field tests, localized AI tuning.

## CONTEXT-ADAPTIVE INVERTER LOGIC

· Dynamically adjust running logic by different environment and users habit.



# Industry-First AI Smart Assistant

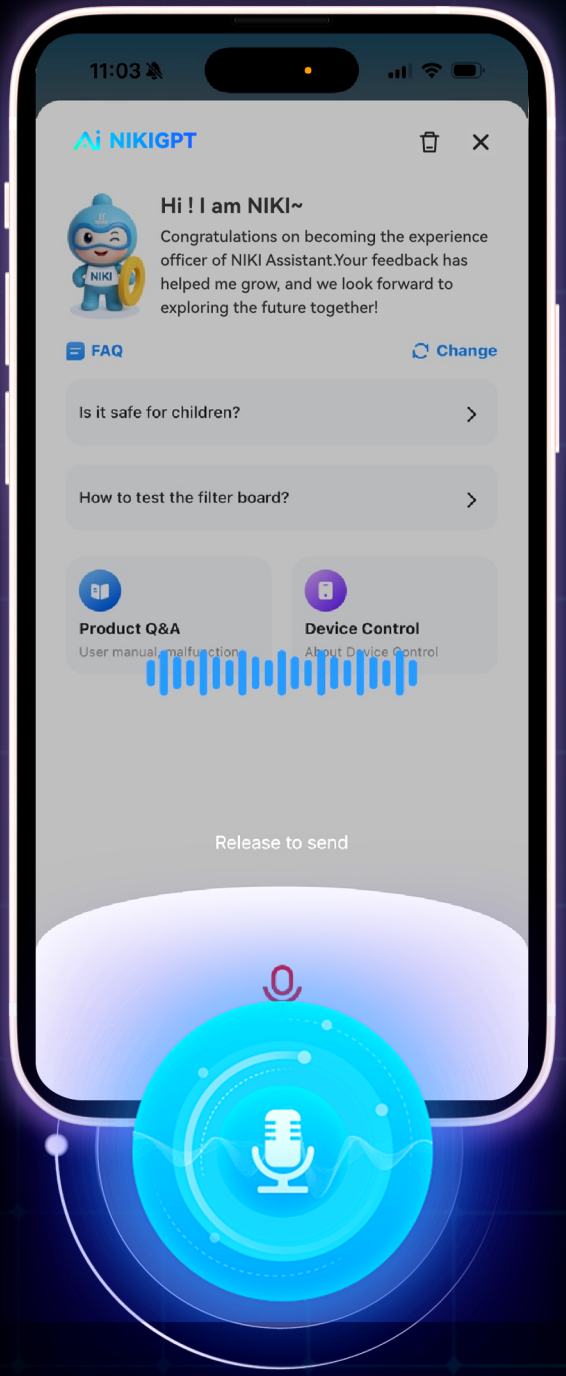


Hi~ i am NIKI. What can I do for you?

I'm hosting a pool party this friday night. Any recommended settings?

**Device Control**
About Device Control

Device Control.

**Product Q&A**
User manual, Malfunction

I'm getting an E03 error.

Please set target temperature to 30°C.

Aqua Temp

Available on the App Store

Get it on Google play

# Building an Ai -Driven Service Ecosystem

PHNIX IOT Platform




Go Heating Pro

Available on the App Store

Get it on Google play

# Industry-First Energy PAD
# AI Heat Pump Centralized Controller



# Industry-First Energy PAD Centralized Control

## Elevate performance, cut costs, and future-proof your system with adaptive intelligence

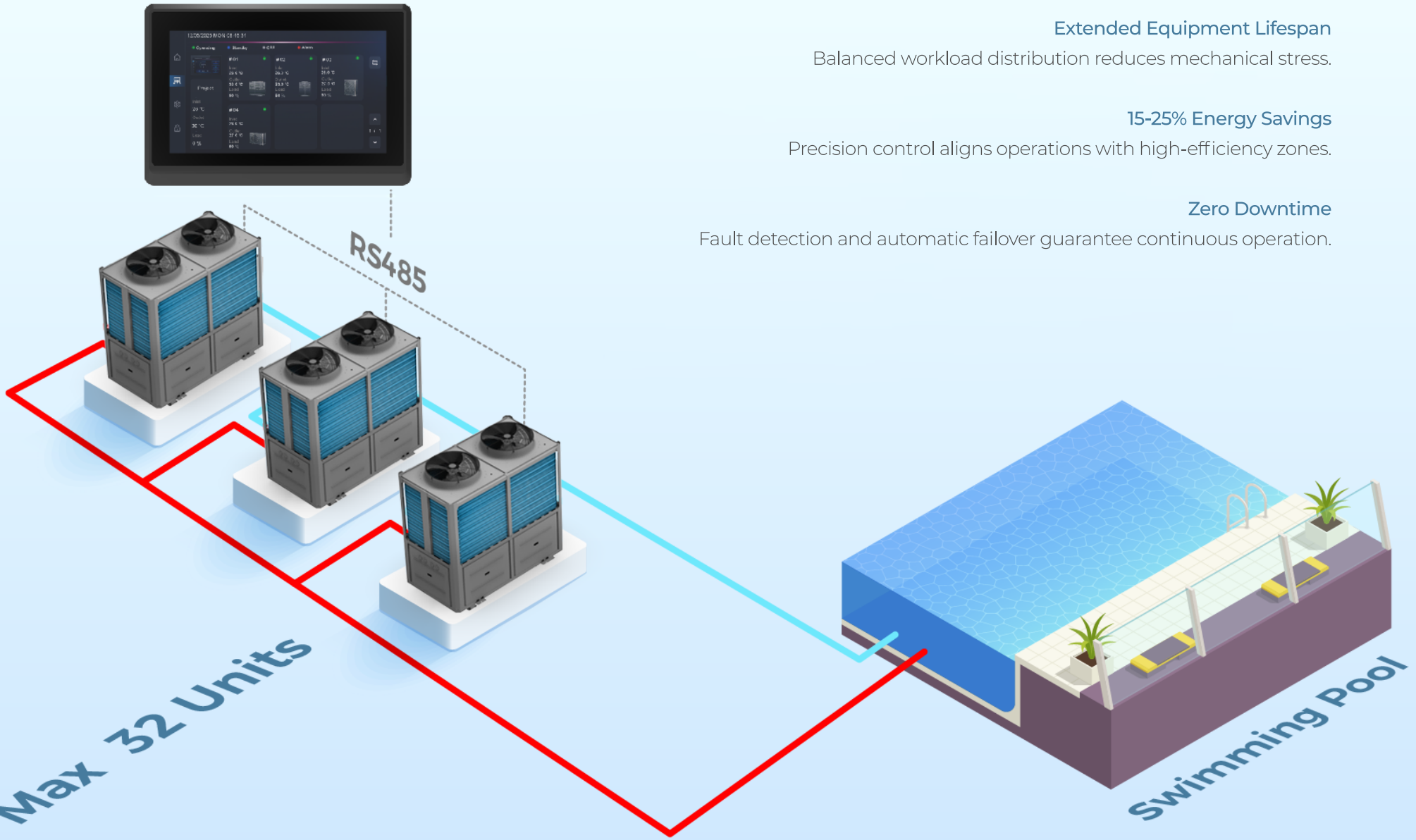


**Extended Equipment Lifespan**

Balanced workload distribution reduces mechanical stress.

**15-25% Energy Savings**

Precision control aligns operations with high-efficiency zones.

**Zero Downtime**

Fault detection and automatic failover guarantee continuous operation.

# **Remote Intelligence**
## Service Beyond Boundaries

Enjoy seamless connectivity via DTU, 4G or Wi-Fi module, enabling remote service and management through PHNIX IOT platform. Easily monitor and adjust water temperature anytime, anywhere-right from your smartphone or tablet.



# IOT Smart Management



# Industry-First Fluorine Cooling Driver Board

The central electric control box with PHNIX self-developed driver board inside adopts fluorine-cooling technology, helping heat dissipation of the driver board, to ensure an efficient operation and make sure the unit can be operated under extreme high ambient temperature 53℃.

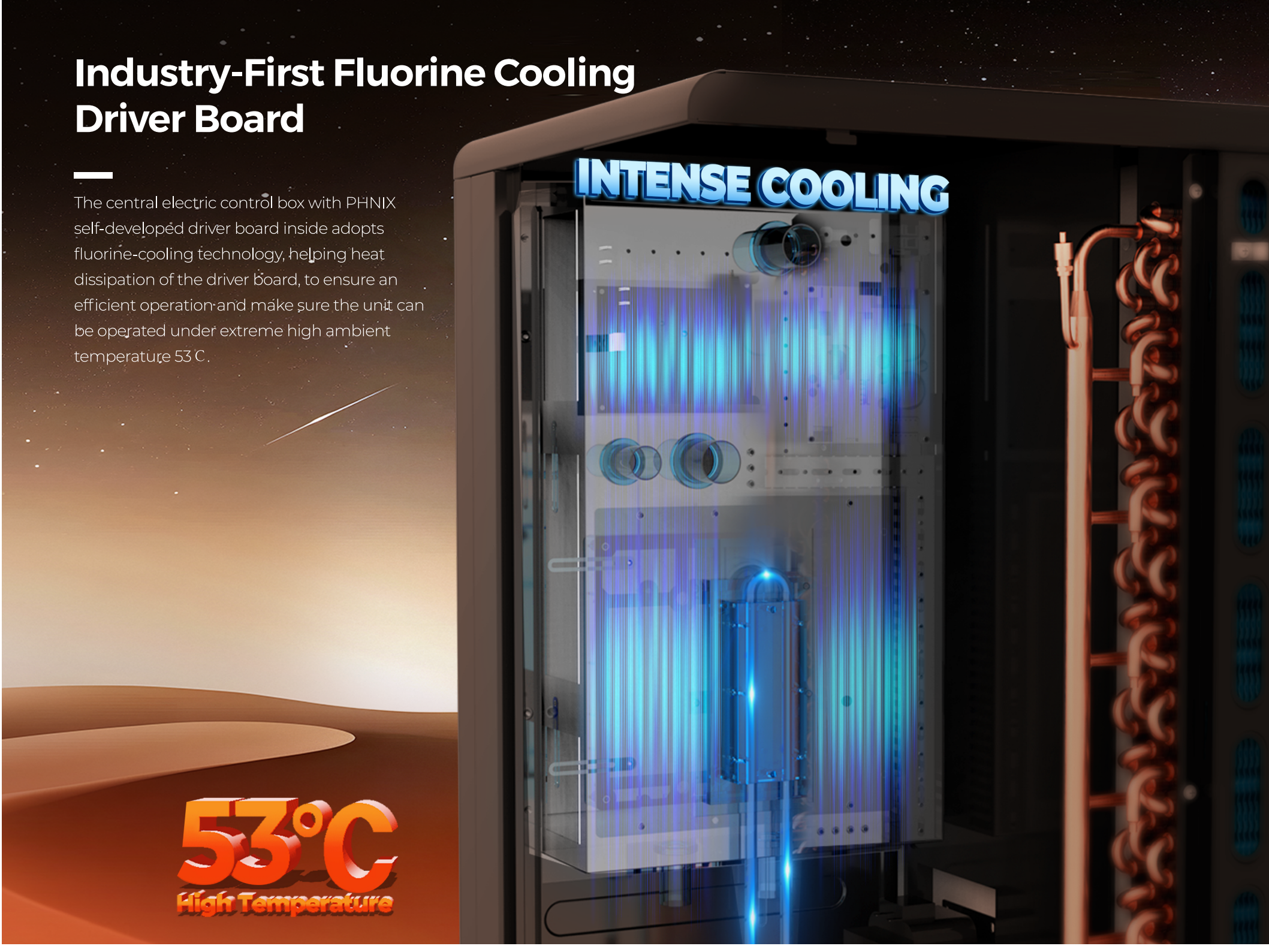

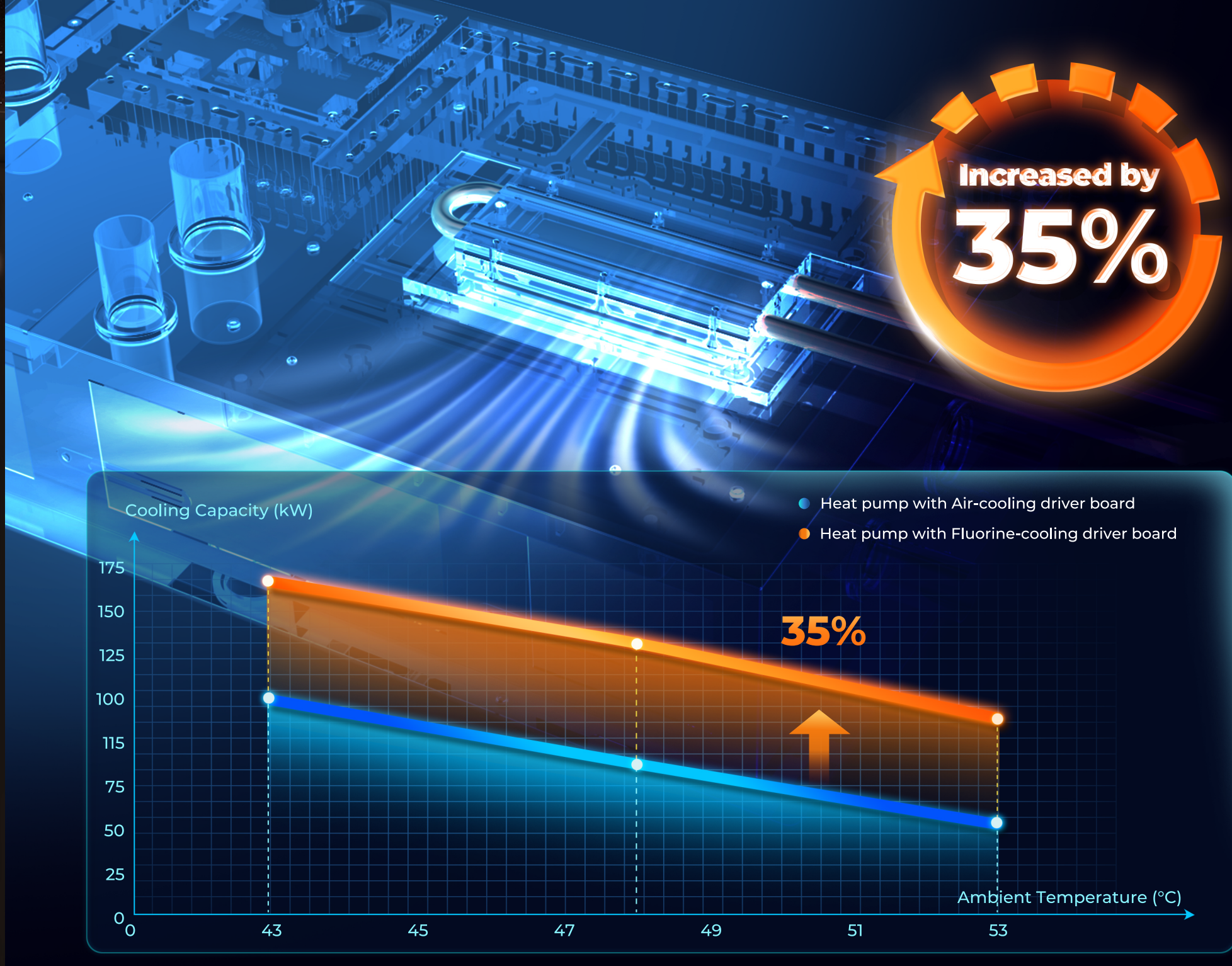
Increased by
35%
Cooling Capacity (kW)
Heat pump with Air-cooling driver board
Heat pump with Fluorine-cooling driver board
35%
175
150
125
100
115
75
50
25
0
0
43
45
47
49
51
53
Ambient Temperature (°C)

# Industry-First Potting Solution for Control Board

Wtih industry-first glue-filling technology, the PCB achieves a 90% reduction in failure rates, ensuring long-term reliability, this design delivers 5x protection

**Moisture resistance ·**

**Dust protection ·**

**Shock resistance ·**

**Pets-proof ·**

**Short circuits and damage protection ·**



# Full Inverter Pool Heat Pump



Wifi Connectivity

COP Up to 16

Electronic Expansion Valve

Inverter Compressor

Titanium Heat Exchanger

Inverter Fan

High/Low Pressure Protection Available

Low as 46dB(A) Under Silence Mode

Environmental Gas Available

Environmental Gas Available

Defrosting

Phase Monitor

# Drawing Dimension---R32 Full Inverter Models

## INVER-24 / INVER-30 / INVER-35 / INVER-40

unit: mm

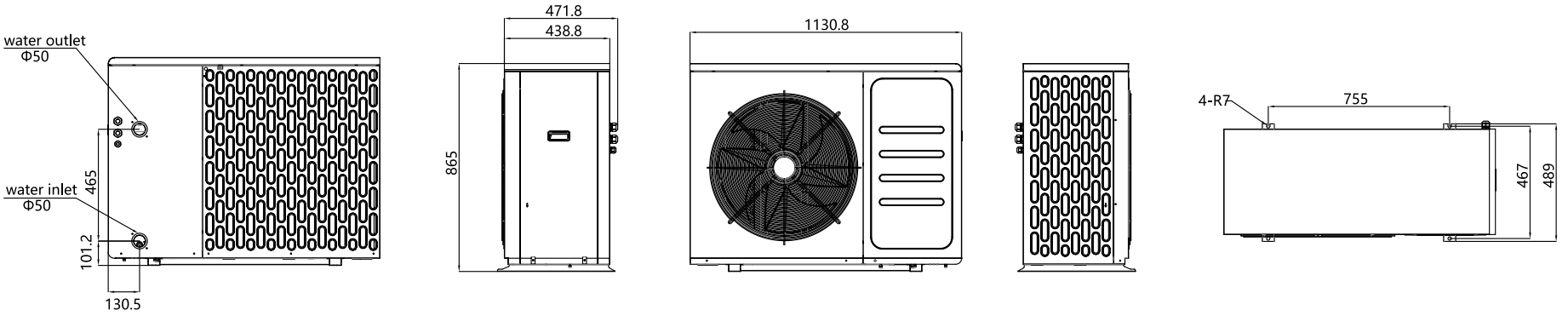


## INVER-50 / INVER-60

unit: mm

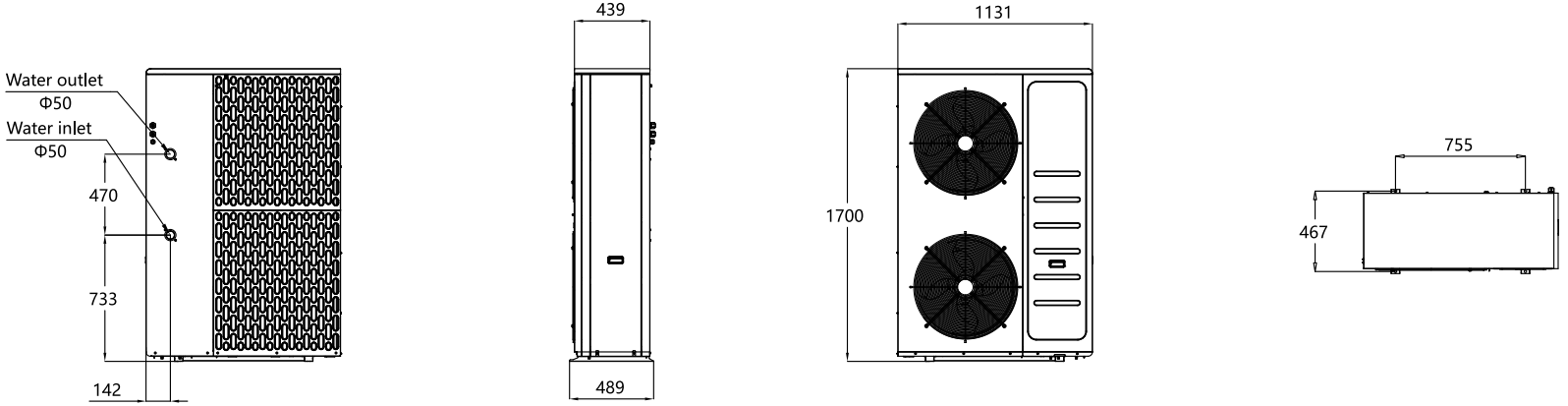


## INVER-80

unit: mm

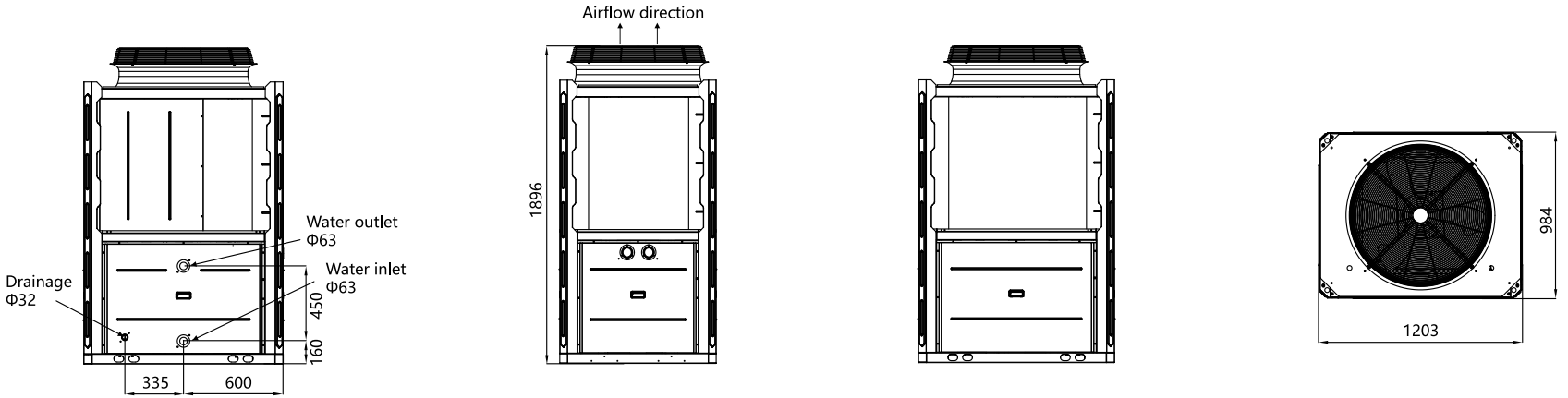

# Drawing Dimension---R410A Full Inverter Models

## INVER-105

unit: mm

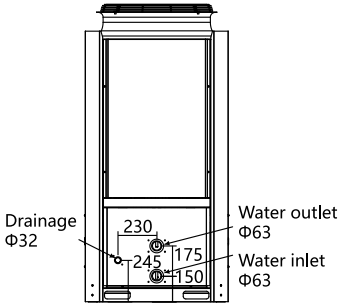


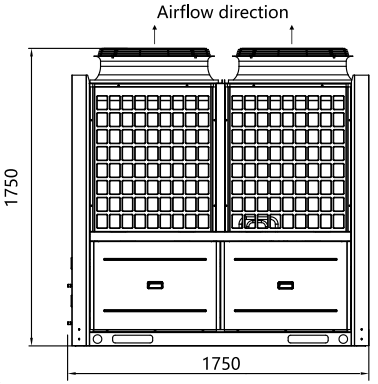


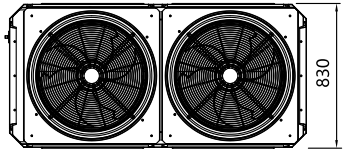


## INVER-150 / INVER-175 / INVER-200 /INVER-250

unit: mm

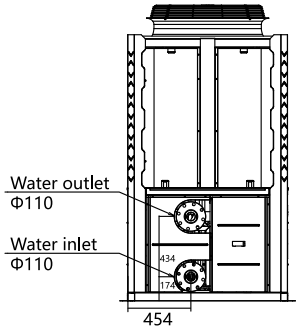


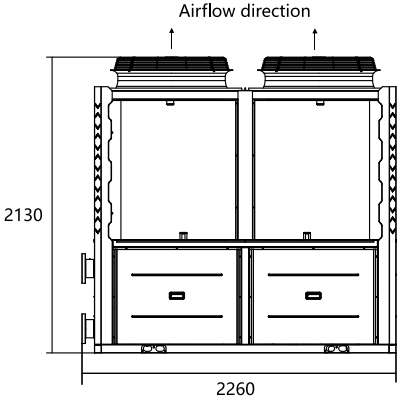


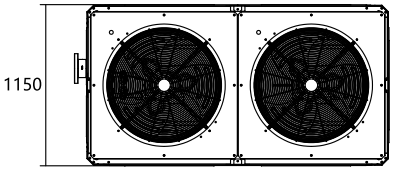


## INVER-300 / INVER-350

unit: mm

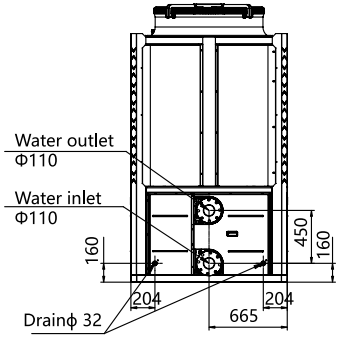


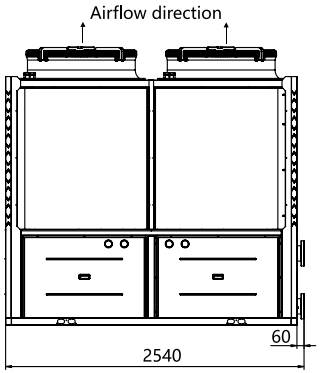


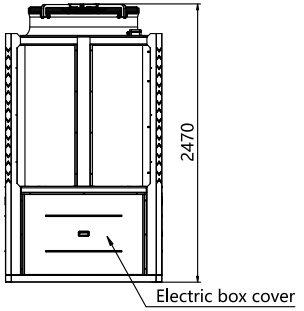


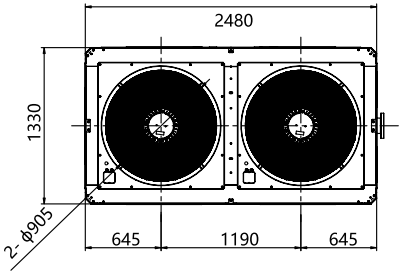

ASTRALPOOL

## Specification









| | | INVER-24 | INVER-30 | INVER-35 | INVER-40 | INVER-50 | INVER-60 | INVER-80 |
|---|---|---|---|---|---|---|---|---|
| Operating Air Temperature | ℃ | 2-53 | 2-53 | 2-53 | 2-53 | 2-53 | 2-53 | 2-53 |
| Refrigerant | / | R32 | R32 | R32 | R32 | R32 | R32 | R32 |
| **Performance (Heating)** | | | | | | | | |
| Air 27℃ /Water 26℃ /Humid. 80% Heating Capacity | kW | 4.6-24 | 4.8-30 | 5.09-35 | 5.92-40 | 14.5-50 | 15.9-60 | 23.0-80 |
| Consumed Power | kW | 0.29- 3.42 | 0.30- 4.15 | 0.32-5.07 | 0.37-5.71 | 0.9-7.14 | 1.0-8.51 | 1.42-11.1 |
| COP | / | 7.0-15.86 | 7.22-16.0 | 6.9-15.9 | 7.0-16 | 7.0-16.10 | 7.05-15.9 | 7.20-16.10 |
| Air 15℃ /Water 26℃ /Humid. 70% Heating Capacity | kW | 3.5-18.5 | 3.81-22 | 3.7-27.5 | 3.92-31.5 | 10.9-40 | 11.5-48 | 17~60 |
| Consumed Power | kW | 0.46-3.7 | 0.50-4.17 | 0.48-5.28 | 0.51-6.0 | 1.42-7.62 | 1.49-9.05 | 2.23~11.6 |
| COP | / | 5-7.61 | 5.28-7.62 | 5.2-7.7 | 5.25-7.68 | 5.23-7.68 | 5.30-7.7 | 5.17-7.62 |
| **Performance (Cooling)** | | | | | | | | |
| Air 43℃ /Water 32℃ /Humid. 70% Cooling Capacity | kW | 2.1-11.5 | 2.3-14 | 3.2-17.5 | 3.5-20 | 6.1-25 | 6.54-30 | 9.5-38 |
| Consumed Power | kW | 0.60-1.95 | 0.62-2.36 | 0.90-2.97 | 1.0-3.33 | 1.74-4.18 | 1.82-5.0 | 2.21-6.91 |
| EER | / | 3.5-5.9 | 3.7-5.93 | 3.56-5.90 | 3.50-6.0 | 3.50-5.98 | 3.60-6.0 | 4.30-5.50 |
| **Technical Data** | | | | | | | | |
| Power Supply | / | 380V/3N~/50Hz & 60Hz | 380V/3N~/50Hz & 60Hz | 380V/3N~/50Hz & 60Hz | 380V/3N~/50Hz & 60Hz | 380V/3N~/50Hz & 60Hz | 380V/3N~/50Hz & 60Hz | 380V/3N~/50Hz & 60Hz |
| Fan Quantity | / | 1 | 1 | 1 | 1 | 2 | 2 | 1 |
| Fan Speed (RPM) | / | 600 | 650 | 680 | 720 | 750 | 750 | 750 |
| Air Flow Volumn | $m^3/h$ | 3600 | 3600 | 3600 | 3600 | 7200 | 7200 | 10400 |
| Fan Direction | / | Horizontal | Horizontal | Horizontal | Horizontal | Horizontal | Horizontal | Vertical |
| Compressor Brand | / | GMCC | GMCC | GMCC | GMCC | GMCC | GMCC | Mitsubishi |
| Compressor Type | / | Rotory | Rotory | Rotory | Rotory | Rotory | Rotory | Rotory |
| Compressor QTY | / | 1 | 1 | 1 | 1 | 1 | 1 | 1 |
| Heat Exchanger | / | Titanium | Titanium | Titanium | Titanium | Titanium | Titanium | Titanium |
| BMS Available | / | YES | YES | YES | YES | YES | YES | YES |
| WIFI Available | / | YES | YES | YES | YES | YES | YES | YES |
| Sound Pressure 1m | dB(A) | 52 | 53 | 54 | 55 | 56 | 57 | 61 |
| Water Connection | mm | 50 | 50 | 50 | 50 | 50 | 50 | 63 |
| Water Flow Volume | $m^3/h$ | 6.00 | 6.00 | 8.00 | 8.00 | 13.00 | 13.00 | 18.00 |
| Water Pressure Drop (max) | kPa | 12.0 | 12.0 | 15.0 | 15.0 | 20.0 | 20.0 | 9.3 |
| Net Dimensions L/W/H | mm | 1131×490×865 | 1131×490×865 | 1131×490×865 | 1131×490×865 | 1131×490×1705 | 1131×490×1705 | 1195×980×1895 |
| Gross Dimensions L/W/H | mm | 1210×515×1010 | 1210×515×1010 | 1210×515×1010 | 1210×515×1010 | 1210×515×1845 | 1210×515×1845 | 1320×1085×2100 |
| Certification | / | | | | CB | | | |
| Function | / | | | | Heating & Cooling | | | |
| Throttling Device | / | | | | EEV | | | |

ASTRALPOOL



## Specification

| | | | INVER-105 | INVER-150 | INVER-175 | INVER-200 | INVER-250 | INVER-300 | INVER-350 |
|---|---|---|---|---|---|---|---|---|---|
| Operating Air Temperature | | °C | 2-53 | 2-53 | 2-53 | 2-53 | 2-53 | 2-53 | 2-53 |
| Refrigerant | | / | R410A | R410A | R410A | R410A | R410A | R410A | R410A |
| **Performance (Heating)** | | | | | | | | | |
| Air 27°C /Water 26°C /Humid. 80% | Heating Capacity | kW | 14.20~105 | 30~150 | 28.2~175 | 32~200 | 65~250 | 61.5~320 | 72~360 |
| | Consumed Power | kW | 0.88-12.85 | 1.87-19.2 | 1.76-22.3 | 1.97-24.2 | 4.03-31.65 | 3.81~43.60 | 4.44-46.15 |
| | COP | / | 8.17-16.14 | 7.80-16.05 | 7.85-16.00 | 8.26-16.25 | 7.9-16.10 | 7.34~16.14 | 7.80-16.20 |
| Air 15°C /Water 26°C /Humid. 70% | Heating Capacity | kW | 9.60-76 | 20.1-115 | 20.5-132 | 22.20-150.00 | 50.00~190 | 53~245 | 60.00~270 |
| | Consumed Power | kW | 1.26-13.05 | 2.61-21.5 | 2.63-22.5 | 2.86-24.6 | 6.41-35.72 | 6.80-44.55 | 7.74-49.36 |
| | COP | / | 5.82-7.62 | 5.35-7.70 | 5.86-7.80 | 6.10-7.76 | 5.32-7.80 | 5.50-7.79 | 5.47-7.75 |
| **Performance (Cooling)** | | | | | | | | | |
| Air 43°C /Water 32°C /Humid. 70% | Cooling Capacity | kW | 15.00-52 | 30.5-73 | 30~85 | 32.3-95 | 72~120 | 75~180 | 83.25~210 |
| | Consumed Power | kW | 3.41-10.2 | 7.09-13.85 | 5.50~18.89 | 7.18-17.27 | 16.36~27.27 | 13.64~39.30 | 18.5~46.66 |
| | EER | / | 4.40-5.10 | 4.30-5.30 | 4.50~5.45 | 4.50-5.50 | 4.4~5.40 | 4.58~5.5 | 4.5~5.5 |
| **Technical Data** | | | | | | | | | |
| Power Supply | | / | 380-415V~/3Ph~/50Hz & 60Hz | 380-415V~/3Ph~/50Hz & 60Hz | 380V/3Ph~/50Hz & 60Hz | 380-415V~/3Ph~/50Hz & 60Hz | 380-415V~/3Ph~/50Hz | 380V/3Ph~/50Hz & 60Hz | 380-415V~/3Ph~/50Hz |
| Fan Quantity | | / | 2 | 2 | 2 | 2 | 2 | 2 | 2 |
| Fan Speed (RPM) | | / | 700 | 750 | 750 | 750 | 800 | 850 | 850 |
| Air Flow Volumn | | $m^3/h$ | 13200 | 28000 | 28000 | 28000 | 30000 | 55000 | 55000 |
| Fan Direction | | / | Vertical | Vertical | Vertical | Vertical | Vertical | Vertical | Vertical |
| Compressor Brand | | / | Mitsubishi | Hitachi | Hitachi | Hitachi | Hitachi | Hitachi | Hitachi |
| Compressor Type | | / | Scroll | Scroll | Scroll | Scroll | Scroll | Scroll | Scroll |
| Compressor QTY | | / | 1 | 2 | 2 | 2 | 2 | 4 | 4 |
| Heat Exchanger | | / | Titanium | Titanium | Titanium | Titanium | Titanium | Titanium | Titanium |
| BMS Available | | / | YES | YES | YES | YES | YES | YES | YES |
| WIFI Available | | / | YES | YES | YES | YES | YES | YES | YES |
| Sound Pressure 1m | | dB(A) | 61 | 62 | 62 | 63 | 64 | 64 | 65 |
| Water Connection | | mm | 63 | 110 | 110 | 110 | 110 | 110 | 110 |
| Water Flow Volume | | $m^3/h$ | 27.5 | 53.0 | 53.0 | 53.0 | 53.0 | 60.0 | 60.0 |
| Water Pressure Drop (max) | | kPa | 25.0 | 37 | 37 | 37 | 37 | 55 | 55 |
| Net Dimensions L/W/H | | mm | 1750×840×1750 | 2260×1150×2130 | 2260×1150×2130 | 2260×1150×2130 | 2260 x 1150 x 2130 | 2480x1330x2360 | 2480x1330x2360 |
| Gross Dimensions L/W/H | | mm | 1840*940*1920 | 2270*1300*2200 | 2270*1300*2200 | 2270*1300*2200 | 2270*1300*2200 | 2570*1490*2500 | 2570*1490*2500 |
| Certification | | / | | | CB | | | | |
| Function | | / | | | Heating & Cooling | | | | |
| Throttling Device | | / | | | EEV | | | | |




**Fluidra Middle East FZE | P.O.Box 61020| Dubai- UAE | Tel. +97 14 883 5505 | www.fluidrame.com**